**ENGINE, CRANKCASE AND CRANKSHAFT - Z26NEY99A4/B4/A6/B6 (C703086)**

**2026 RZR - RZR XP S 1000 ULTIMATE (R01) - Z26NEY99A4/B4/A6/B6**

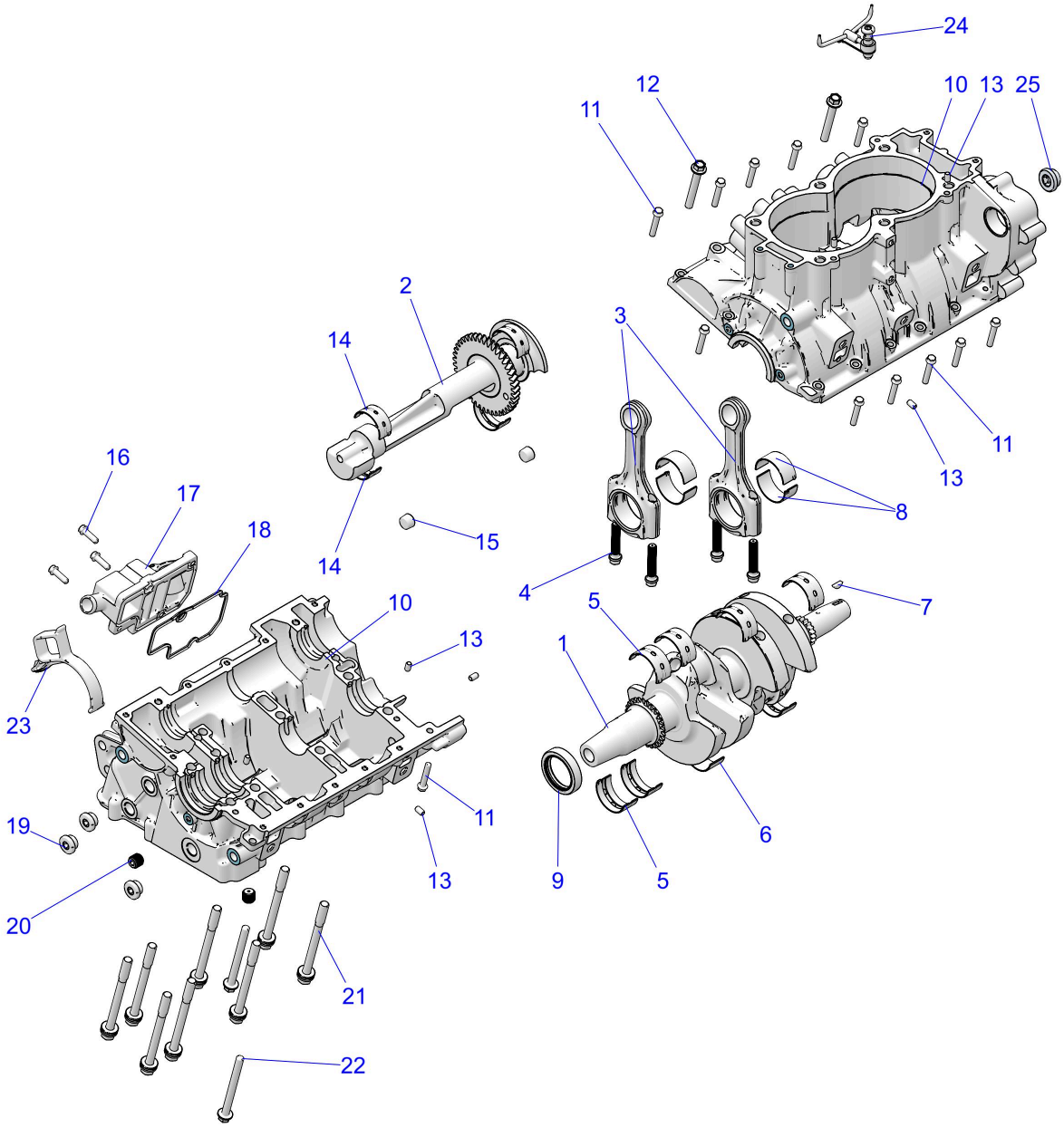


© 2021 Polaris Industries Inc. C703086

| *Reference #* | *Part#* | *Description* | *Quantity* |
|---|---|---|---|
| 1 | 3024057 | ASM-CRANKSHAFT | 1 |
| 2 | 1204835 | ASM-BALANCE SHAFT | 1 |
| 3 | 3024568 | ASM-CONNECTING ROD [INCLUDES 4] | 2 |
| 4 | 7520356 | BOLT-CONROD MJ9X1.0X44 | 4 |
| 5 | 3515160-001 | BEARING-MAIN,G-90,41MM | 7 |
| 5 | 3515160-002 | BEARING, MAIN, BLUE | 7 |
| 5 | 3515160-003 | BEARING, MAIN, GREEN | 7 |
| 5 | 3515160-004 | BEARING, MAIN, YELLOW | 7 |
| 5 | 3515160-005 | BEARING, MAIN, RED | 7 |
| 6 | 3515161-002 | BEARING-MAIN LRW, BLUE | 1 |

| | | | |
|---|---|---|---|
| 6 | 3515161-003 | BEARING-MAIN LRW, GREEN | 1 |
| 6 | 3515161-004 | BEARING-MAIN LRW, YELLOW | 1 |
| 7 | 7721122 | KEY-WOODRUFF,4X5 | 1 |
| 8 | 3515159-001 | BEARING, CONNECTING ROD, WHITE | 4 |
| 8 | 3515159-002 | BEARING, CONNECTING ROD, BLUE | 4 |
| 8 | 3515159-003 | BEARING, CONNECTING ROD, GREEN | 4 |
| 8 | 3515159-004 | BEARING, CONNECTING ROD, YELLOW | 4 |
| 9 | 3610284 | SEAL-CRANKSHAFT | 1 |
| 10 | 3024253 | ASM-CRANKCASE [INCLUDES 13, 15, 19-21, & 23] | 1 |
| 11 | 7518578 | SCR-HXFL-M6X1.0X35 8.8 ZY3 | 12 |
| 12 | 7519186 | SCR-HXFLG,M8X1.25X60 | 2 |
| 13 | 5143560 | PIN-DOWEL,M6X10 | 8 |
| 14 | 3514756 | BEARING-BAL SHAFT,38X41X17.5 | 4 |
| 15 | 7521170 | PLUG-3/8 NPT,HX/SOC W/SEALANT | 2 |
| 16 | 7518576 | SCREW-HXFL-M6X1.0X20 8.8 ZY3 | 3 |
| 17 | 5145394 | COVER-BREATHER,MACH | 1 |
| 18 | 5815811 | SEAL-COVER,BREATHER | 1 |
| 19 | 7052642 | PLUG-HEX SCKT,W/O-RING,M16X1.5 | 3 |
| 20 | 7518835 | PLUG-HEX SOCKET,1/4X18,SEALANT | 2 |
| 21 | 7527904 | SCR-HXFL,M10X1.25X113MM 10.9 | 8 |
| 22 | 7519154 | SCR-HXFLG,M8X1.25X90 | 2 |
| 23 | 5455583 | DIVERTER, OIL DRAIN | 1 |
| 24 | 3022856 | JET, PISTON | 1 |
| 25 | 7052643 | PLUG-HEX SCKT,W/O-RING,M20X1.5 | 1 |

Copyright 1996-2026 Polaris Industries U.S.A All rights reserved.